DEETRAKS

USE: use only on an MTB. Any other use (such as on a tandem, road bike, cyclo-cross bike...) is strongly inadvisable, is the sole responsibility of the user and voids the Mavic warranty.

WHEEL WEIGHTS WITHOUT QUICK RELEASE SKEWER:

Front:	1210 g
Rear:	1425 g

WHEEL REFERENCES:

Front:	324 011 10
Rear M10:	324 012 13
Pair:	324 077 14

RIMS

SALES REFERENCES:
Front and rear: 324 201 14

WIDTH

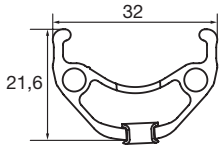

VALVE HOLE Ø

Ø: 8,5 mm
Length.: ≥ 32 mm

RECOMMENDED TIRE WIDTH AND PRESSURE

Dimensions:
Ø 26' only
ETRTO 559 x 25 compatible
Recommended tire width: 2.0 to 3.0

Recommended tire pressure: See page 14

HUBS

MAINTENANCE: clean with dry cloth or soap and water
Do not use pressurized water

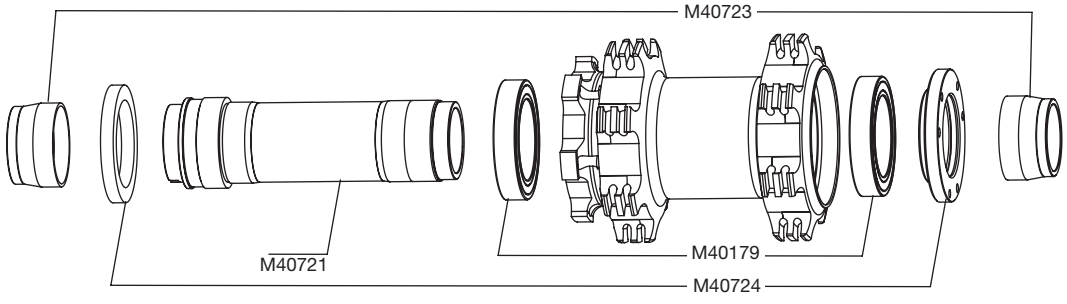

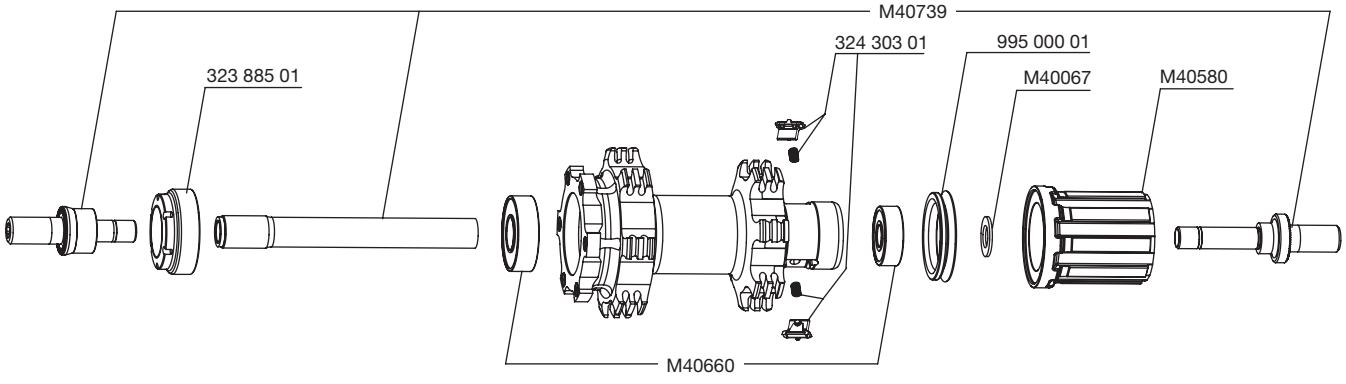

WHEEL BUILDING

REFERENCES AND LENGTHS: Front and rear: 324 224 01, length 272 mm (per 16 with nipples)

FEATURES:
Black, round, stainless steel, straight pull spokes with ABS nipples (self-locking)

LACING PATTERN:
Front and rear: crossed 3 on both sides

TENSION :
Front: 100 to 145 kg
Rear free wheel side: 115 to 155 kg

ACCESSORIES

WHEEL DELIVERED WITH:

- 20 mm adapters M40723 (with front wheel)
- Fixing nuts M40740
- Rim tape 559x24x0.6 (324 195 01 per 4)
- User guide and warranty card

MAINTENANCE

- Replacing the front rim See page 20
- Replacing the rear rim See page 21

For all hub related maintenance procedures, refer to the 2003 technical manual (Deemax UST section), or consult the website **www.tech-mavic.com**